PT Ltd.

Innovative Measurement Electronics

...better value by design!

...a world of excellence!

PTASP6-W

ALUMINIUM SINGLE POINT

- Fully sealed
- C3 accuracy class
- Annodised for protection
- Suits larger platform scales

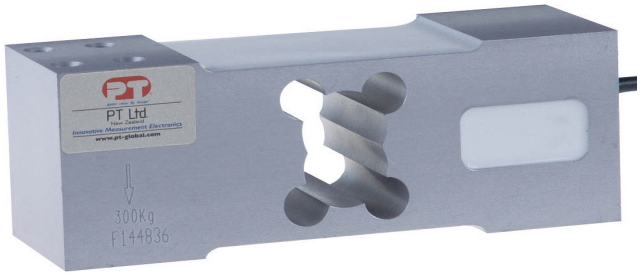

Models

Capacity	*Order*	*Weight (kg)*	*Platform Size*
50kg	SPM0050A06WXXX	1.95	600x600mm
75kg	SPM0075A06WXXX	1.95	600x600mm
100kg	SPM0100A06WXXX	1.95	600x600mm
150kg	SPM0150A06WXXX	1.95	600x600mm
200g	SPM0200A06WXXX	1.95	600x600mm
250kg	SPM0250A06WXXX	1.95	600x800mm
300kg	SPM0300A06WXXX	1.95	600x800mm
500kg	SPM0500A06WXXX	1.95	600x800mm
635kg	SPM0635A06WXXX	1.95	600x800mm

NOTE:dimensions are in mm(in.).

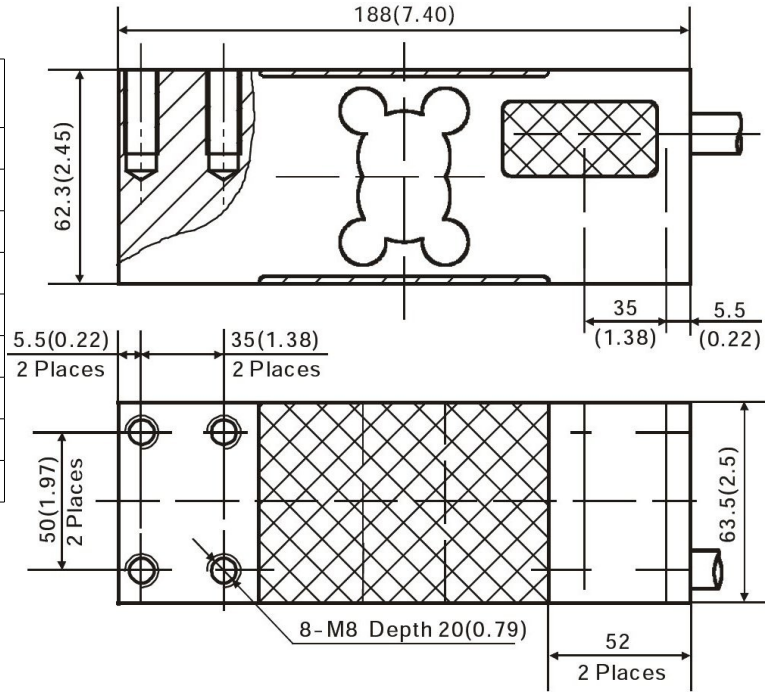

Specifications

Signal Output at Capacity.....2±0.2 mV/V
Linearity Error.....< 0.017% FSO
Non-Repeatability.....< 0.010% FSO
Combined Error.....< 0.020% FSO
Off Centre Load Error.....< 0.020% FSO
Creep/(30 mins.).....< 0.015% FSO
Zero Balance.....< 2% Capacity
Temperature Effect on Span(/10C).....< 0.014% FSO
Temperature Effect on Zero(/10C).....< 0.017% FSO
Operating Temperature Range.....-35 ~ +65 C
Compensated Temperature Range.....-10 ~ +40 C
Storage Temperature Range.....-50 ~ 85 C

Service Load.....100% Capacity
Safe Load.....150% Capacity
Ultimate Load.....300% Capacity
Input Resistance.....406Ω ± 6Ω
Output Resistance.....350Ω ± 3Ω
Insulation Resistance.....> 5000 MΩ (@50 VDC)
Excitation Voltage(Rec).....5~12 V AC/DC
Excitation Voltage(Max.).....18 V AC/DC
Cable.....3m long, Ø5.0 mm
.....6 core screened PU
Material.....Aluminium Alloy
Sealing.....IP65

Wiring Connections

Excitation +ve.....Red
Excitation -ve.....Black

Sense +ve.....Blue
Sense -ve.....Yellow

Signal +ve.....Green
Signal -ve.....White

R81030

ISO 9001:2000 SGS

CE

http://www.pt-global.com

Established 1979

PT Weighing Systems