TLJ-NA Tension Load Cell 10~100kN

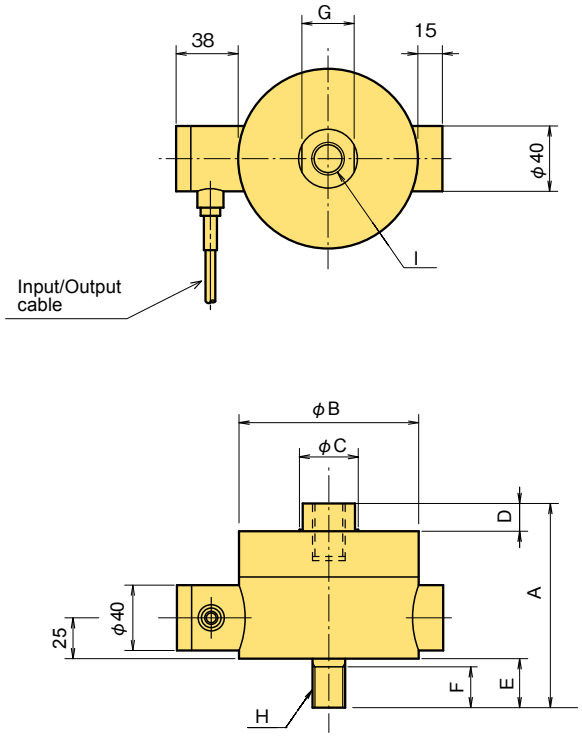

The TLJ-NA Tension Load Cell is designed considering JIS B 7728 "Calibration of force-proving instruments used for the verification of uniaxial testing machine" and is the most suitable for verification of single axis tension testing machine. Calibration in accordance with JIS B 7728 is available at extra cost.

Protection ratings: IP65 equivalent

High stability
Remote sensing compatible

■ Dimensions

TYPE	A	φB	φC	D	E	F	G	H	I
TLJ-10KNA	125	110	36	17	30	25	32	M20 x 1.5	M20 x 1.5 DP35
TLJ-20KNA	125	110	36	17	30	25	32	M20 x 1.5	M20 x 1.5 DP35
TLJ-50KNA	132	125	36	17	35	30	32	M20 x 1.5	M20 x 1.5 DP35
TLJ-100KNA	142	145	42	17	40	34	36	M24 x 2	M20 x 2 DP35

■ Fitting accessory

TYPE	Rod End FE
TLJ-10KNA ~ -50KNA	FE-5C/FE-5D
TLJ-100KNA	FE-5A/FE-5B

■ SPECIFICATIONS

TYPE	TLJ-10KNA	TLJ-20KNA	TLJ-50KNA	TLJ-100KNA
Capacity	10kN	20kN	50kN	100kN
Rated Output	2mV/V(4000×10^{-6} strain) or over			
Non-linearity	0.03%RO			
Hysteresis	0.03%RO			
Natural frequency	3.5kHz	4.4kHz	4.5kHz	4.7kHz
Temperature effect on zero	0.005%RO/°C			
Temperature effect on span	0.005%/°C			
Compensated temperature range	-10 ~ +60°C			
Allowable temperature range	-30 ~ +80°C			
Over load	120%			
Ultimate overload rating	200%			
Input/Output resistance	350Ω±2%			
Recommended exciting voltage	Less than 6V			
Allowable exciting voltage	15V			
Zero balance	5%RO			
Weight	5.3kg	5.3kg	6.9kg	10kg

Input/Output cable :
φ6mm 0.08mm^2 6-core shielded polyurethane cable 5m (Remote sensing compatible)